NOTES:

1) DIMENSIONS ARE IN INCHES.
2) APPLY WIRE ASSIGNMENT LABEL 6 INCHES FROM WIRE END.
3) WIRE LABEL SIZE SHALL BE 1 INCH MIN.
4) ITEM 3 (2) WIRE INSTALLATION. STRIP ENDS AND STACK ROUTING BOTH WIRES TO THE SAME END OF THE RECEPTACLE.
5) APPLY BLACK WIRE LABEL 1 INCH FROM WIRE END.
6) ALL WIRE SHALL BE LOOMED 10 INCHES FROM END OF THE WIRE UNLESS OTHERWISE NOTED

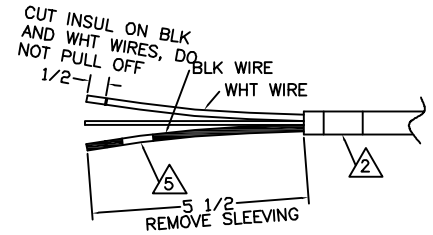

DETAIL A
13 PLACES

ITEM	QTY	SIZE1	UNITS	PART#	DESCRIPTION	MATERIAL	NOTE
1	1	1616	in	001106	CABLE 10/2 ROMEX		
2	1	5700	in	007858	CABLE 12/2 ROMEX		
2	1	242	in	007858	CABLE 12/2 ROMEX		IF BASE FREEZER
3	3		ea	009199	RECEPT SINGLE WHITE FLUSH SCD 15A	PASS & SEYMOUR SC-821-M3	
4	66		ea	019789	LABEL		
5	10		ea	007903	CONNECTORMOLEX 14-12 GA (SOLID)		
6	4		ea	020716	CONNECTOR MOLEX 10 GA (SOLID)		
7	1	282	in	5004603	1-1/4" DIA LIQUID TIGHT TUBING		
8	2		ea	009200	JUNCTION DEVICE WHITE SCD 20A	PASS & SEYMOUR SC-014-P	
9	1	428	in	013370	CABLE SJ 12/3		IF HEATED TILE
10	1	446	in	009148	LOOM 5/8" DIA		
11	1	290	in	5019697	LOOM 1/2" DIA		
12	1	210	in	009150	LOOM 1" DIA		
13	1	60	in	009151	LOOM 1 1/2" DIA		
14	1	130	in	009154	LOOM 1 1/4" DIA		
15	1		ea	5014148	RECEPT SINGLE 15A BR SCD	PASS & SEYMOUR SC821-M1	

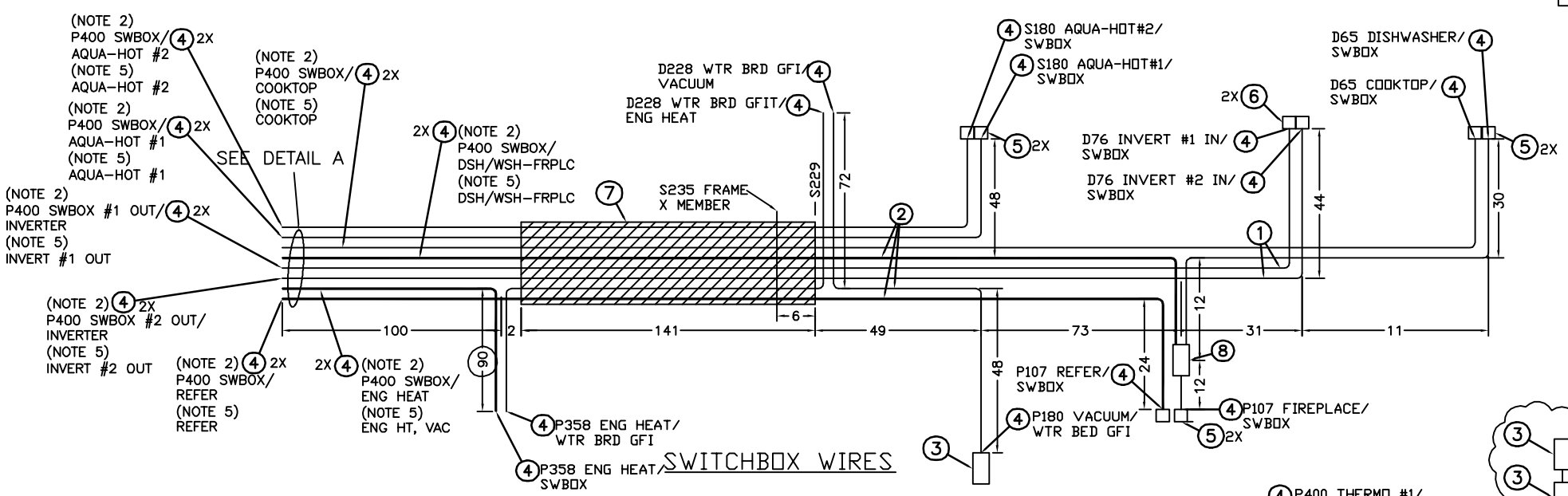

SWITCHBOX WIRES

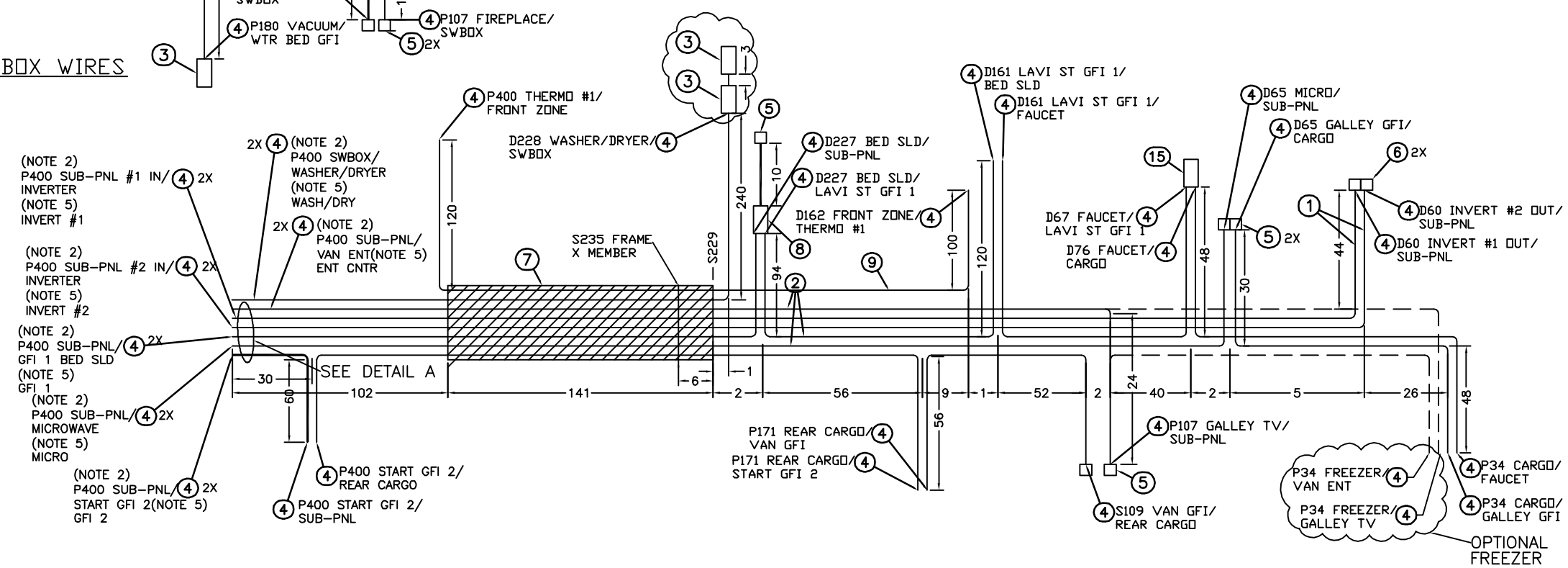

SUB PANEL WIRES

THIS DOCUMENT IS THE PROPERTY OF TIFFIN MOTORHOMES AND REPRESENTS A PROPRIETARY ARTICLE IN WHICH TIFFIN MOTORHOMES RETAINS ANY AND ALL PATENT AND OTHER RIGHTS, INCLUDING EXLUSIVE RIGHTS OF USE AND/OR MANUFACTURE, AND/OR SALE. POSSESSION OF THIS PRINT DOES NOT CONVEY ANY PERMISSION TO REPRODUCE PRINT OR MANUFACTURE ARTICLE(S) SHOWN HEREIN, SUCH PERMISSION TO BE GRANTED ONLY BY SPECIFIC AUTHORIZATION IN WRITING, SIGNED BY AN OFFICER OR OTHER AUTHORIZED AGENT OF TIFFIN MOTORHOMES, THEREOF. SPECIFICATION CANNOT BE CHANGED WITHOUT WRITTEN APPROVAL OF TIFFIN MOTORHOMES.

REV#	DATE	ECN#	DESCRIPTION	BY
A	02/17/2016		ADDED 30 IN TO ENG PREHEAT AND ADDED ADDITIONAL OUTLET TO THE WASHER/DRYER LINE	JDB

TIFFIN MOTORHOMES, INC.
105 2ND STREET NW - RED BAY, AL 35582

2016 45 OZ 110V FLR HARNESS
FREIGHTLINER

MODEL(S): 45 OZ		AUTH:	JDB
CHASSIS:		DATE:	09/21/2015
MAT'L# 5052349	DWG# -	STATUS:	RELEASED
		SHT# 01	REV# A